PROJECT 03: Design and Analysis of Differential Amplifier by using Cadence Virtuoso

A Comprehensive Study of Analog Circuits

By: Priya Chaudhary, Astitva Johri and

Bhavya Solanki

Chapters:

List of Figures……..……. 3

1. Introduction …….. 4
2. Brief Description…… 5
3. Circuit Design……. 6-7
   3.1 Tools and Environment Setup……. 6
   3.2 Circuit Design Steps……... 6
   3.3 Analysis and Optimization……..……... 7
4. Simulation Results…….. 8
5. Advantages and Disadvantages…….. 9
   5.1 Advantages……. 9
   5.2 Disadvantages……. 9
6. Conclusion…….. 10
7. Frequently Asked Questions (FAQs)…….. 11

LIST OF FIGURES

Figure 3.1 Circuit of Differential Amplifier……..… 7

Figure 3.2 Symbol of Differential Amplifier……..… 7

Figure 4.1 Simulation Results of Differential Amplifier……... 8

1. INTRODUCTION

A differential amplifier is one of the most significant components in analog electronics, renowned for its ability to process small differential signals with high precision while rejecting noise and interference. It serves as the core of many analog circuits, including operational amplifiers and analog-todigital converters.
The primary advantage of a differential amplifier lies in its ability to amplify the voltage difference between two inputs, while suppressing signals that are common to both, such as noise or interference from external sources.

This document delves into the process of designing and analyzing a differential amplifier using Cadence Virtuoso, an industry-standard electronic design automation (EDA) tool. Cadence Virtuoso provides an integrated environment for circuit simulation, layout, and verification, making it an ideal choice for the detailed exploration of analog circuit behavior. The aim of this document is to guide readers through the design process, highlighting the theoretical and practical aspects of differential amplifier operation, and to present a comprehensive understanding of its capabilities and limitations.

2. BRIEF DESCRIPTION

Differential amplifiers are crucial in applications requiring high precision and noise rejection. They are commonly found in operational amplifiers (op-amps), analog-to-digital converters, and communication systems.

The primary function of a differential amplifier is to:

- Amplify the voltage difference between two inputs.
- Reject any voltage common to both inputs (common-mode rejection).

Key characteristics of differential amplifiers include:

- High common-mode rejection ratio (CMRR).
- High input impedance.
- Low output impedance.

3. CIRCUIT DESIGN

3.1 Tools and Environment Setup

To begin designing a differential amplifier in Cadence Virtuoso:

1. Launch Cadence Virtuoso and set up the necessary libraries and technology files.
2. Create a new schematic for the differential amplifier circuit.
3. Select appropriate components such as MOSFETs, resistors, and current sources from the library.

3.2 Circuit Design Steps

1. **Input Stage Design**:
   - Use a pair of matched MOSFETs (M1 and M2) to form the differential input stage.
   - Connect the sources of M1 and M2 to a current source to ensure constant biasing.
2. **Load Design**:
   - Use either resistive or active loads (e.g., current mirror loads) for better performance.
3. **Biasing Circuit**:
   - Design a biasing network to provide the required operating point for the MOSFETs.
4. **Simulation Setup**:
   - Set up a testbench to analyze key parameters such as gain, CMRR, input impedance, and frequency response. ○ Perform DC, AC, and transient analyses.

3.3 Analysis and Optimization

- **DC Analysis**: Verify the biasing points and ensure the MOSFETs operate in the saturation region.
- **AC Analysis**: Measure the gain and frequency response of the amplifier.
- **Transient Analysis**: Study the time-domain response to input signals.
- **Parameter Optimization**: Adjust component values to achieve desired performance metric.

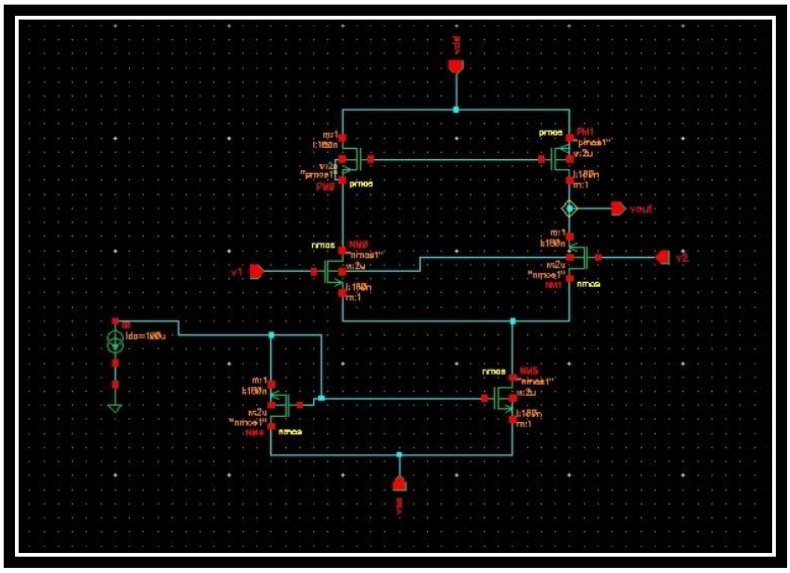

Figure 3.1 Circuit of Differential Amplifier

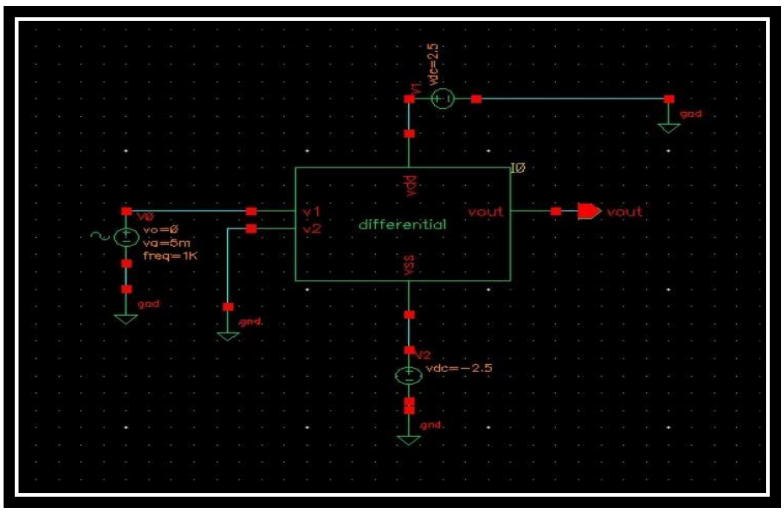

Figure 3.2 Symbol of Differential Amplifier

4. SIMULATION RESULTS

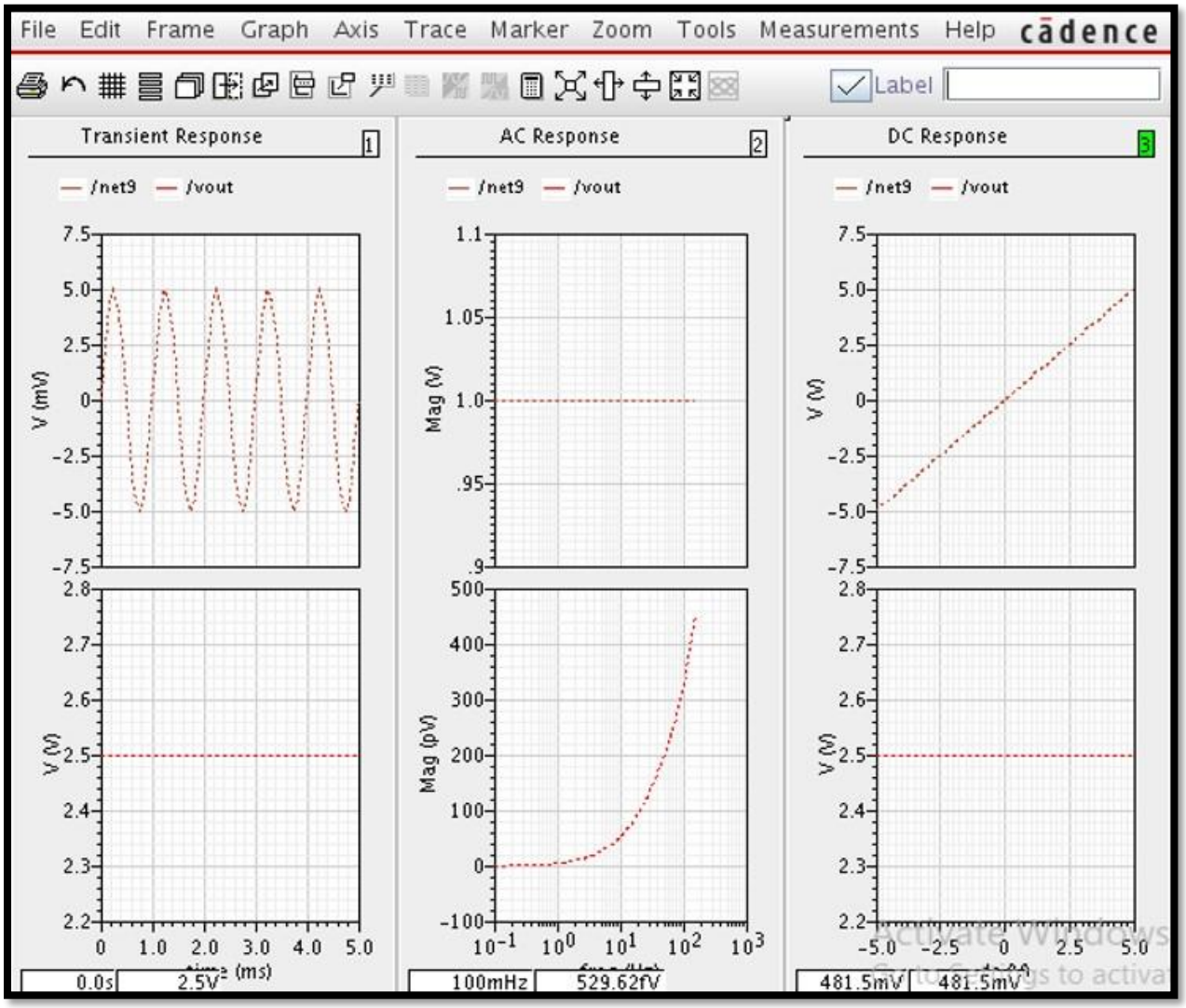

Figure 4.1: Simulation results of Differential Amplifier

5. ADVANTAGES AND DISADVANTAGES

5.1 Advantages:-

- **High Noise Rejection:** Excellent suppression of common-mode noise.
- **Increased Gain:** High differential gain compared to single-ended amplifiers.
- **Low Distortion:** Reduced harmonic distortion due to symmetry.
- **Versatility:** Applicable in various analog circuits and systems.

5.2 Disadvantages:-

- **Complex Design**: Requires precise matching of components for optimal performance.
- **Power Consumption**: Higher power consumption compared to single-ended designs.
- **Limited Common-Mode Range**: Operates efficiently within a restricted input common-mode range.
- **Component Sensitivity**: Performance is highly dependent on component variations and temperature.

6. CONCLUSION

In conclusion, the differential amplifier is a versatile and indispensable component in analog circuit design, offering unmatched precision, noise rejection, and signal integrity. By amplifying the difference between two input signals and rejecting common-mode noise, it serves as a cornerstone in the development of high-performance analog systems. The design and analysis process using Cadence Virtuoso provides a practical framework for understanding the behavior and optimizing the performance of differential amplifiers.

Despite challenges such as component matching and power consumption, the advantages of differential amplifiers make them an essential choice for modern electronic systems. The ability to model and simulate these circuits in Cadence Virtuoso allows designers to experiment with various configurations, perform detailed analyses, and ensure reliable performance across a wide range of applications. This document has outlined the key steps in designing a differential amplifier and highlighted its significance in the realm of analog electronics.

7. FREQUENTLY ASKED QUESTIONS (FAQs)

Q1: What is the role of a current source in a differential amplifier?

Answer: The current source provides constant biasing for the input MOSFETs, ensuring stable operation and improving the amplifier's linearity.

Q2: Why is common-mode rejection important?

Answer: Common-mode rejection is crucial because it allows the amplifier to suppress noise and interference that is common to both input signals, improving the signal-to-noise ratio.

Q3: Can I use BJTs instead of MOSFETs in a differential amplifier?

Answer: Yes, BJTs can be used, but they may require additional biasing networks and have different performance characteristics compared to MOSFETs.

Q4: What analyses should be performed for a differential amplifier?

Answer: Essential analyses include DC analysis, AC analysis, transient analysis, and noise analysis to evaluate the amplifier's performance comprehensively.

Q5: How can I improve the gain of a differential amplifier?

Answer: The gain can be improved by using high-impedance loads, increasing the transconductance of the input transistors, or employing cascoded configurations.